Town of Colonial Beach

Typical Deck Details

Based on the 2012 Virginia Construction Code

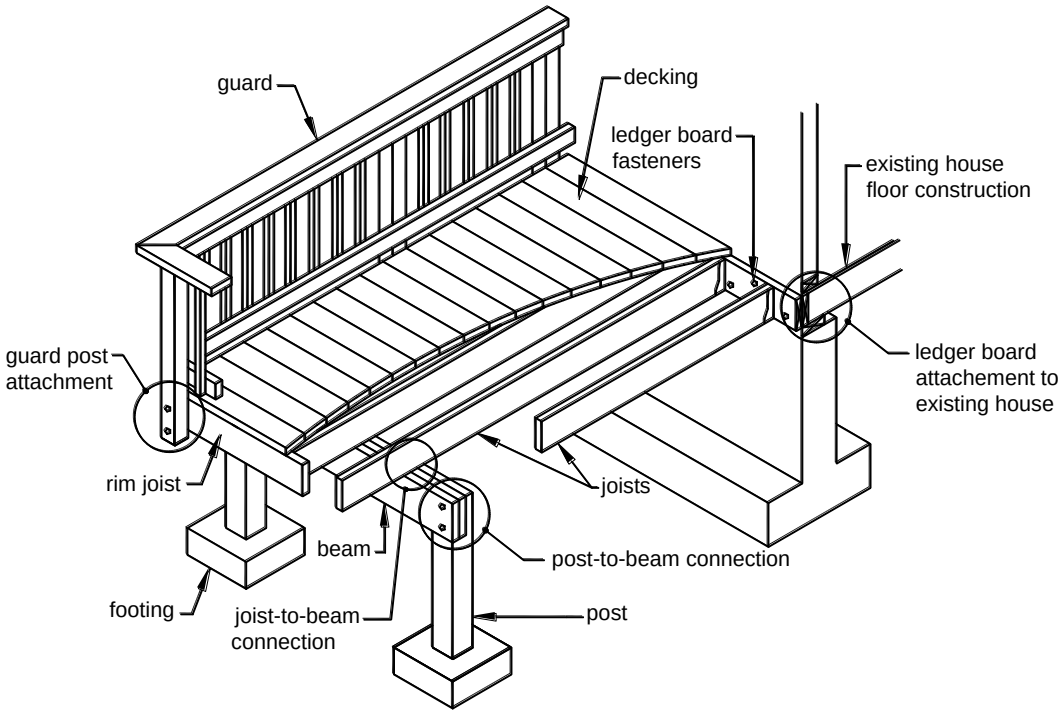

CONTENTS

General Notes 2
Decking Requirements 2
Joist Size 3
Beam Size & Assembly Requirements 4
Deck Framing Plan 5
Joist-to-Beam Connection 5
Joist Hangers 6
Post Requirements 6
Rim Joist Requirements 6
Footings 6
Ledger Attachment Requirements 7
Prohibited Ledger Attachments 9
Ledger Board Fasteners 9
Free-Standing Decks 11
Lateral Support of Free-Standing Decks 11
Guard Requirements 12
Guard Post Attachments 13
Stair Requirements 15
Stair Handrail Requirements 16
Stair Footing Requirements 17
Stair Lighting Requirements 17
Framing at Chimney or Bay Window 17
Safety Glazing/Product Specifications 18

THE USE OF THIS PACKAGE IN LIEU OF SUBMITTED DRAWINGS APPLIES TO <u>SINGLE SPAN, SINGLE LEVEL, RESIDENTIAL DECKS</u> ONLY. DECKS MUST BE CONSTRUCTED IN STRICT CONFORMANCE WITH THE DETAILS CONTAINED HEREIN. A COPY OF THIS DECK DETAIL MUST BE ON THE JOB SITE AND AVAILABLE TO THE INSPECTOR DURING THE INSPECTION PROCESS.

GENERAL NOTES

1. All lumber shall be southern pine, grade #2 or better and shall be pressure treated in accordance with American Wood-Preservers' Association standard Use Category System U1-11 (refer to 2012 VRC for other approved species of lumber).
2. All nails shall be spiral or annular grooved.
3. Chemicals used in pressure treatment methods will prematurely corrode standard fasteners, hardware, and flashing when in contact with lumber. To combat corrosion, the following is required.
   - All screws and nails shall be hot-dipped galvanized or stainless steel.
   - All hardware (joist hangers, cast-in-place post anchors, etc.) shall be galvanized with 1.85 oz/sf of zinc (G-185 coating) or shall be stainless steel. Look for products such as "Zmax" from Simpson Strong-Tie or "Triple Zinc" from USP.
   - **DO NOT USE ALUMINUM FOR FLASHING.**
4. Decks constructed according to this handout are not approved for **commercial** use and are not approved for future hot tub installations.
5. Deviations from this handout and conditions which do not meet the details shown herein require a plan submission.
6. Inspections:
   - A footing, framing, and final inspection are required on all decks.
   - **Footing inspections are required PRIOR to the placement of concrete**.
   - Framing and final inspections may be combined if all portions of the deck framing and mechanical attachments are at least 36" above grade.
   - **Inspections are required by law. Failure to receive any and all inspections can result in the issuance of violations which may lead to legal proceedings.**
7. It is the responsibility of the permit holder or the permit holder's representative to notify the town when the stages of construction are reached that require an inspection.
   - Inspection Request: **804-224-7506,** 8:30 a.m. to 4:30 p.m., Monday – Friday.
   - **Requests must be called in by 4:00 p.m. to schedule an inspection for the following day**.
8. Decks shall not be used or occupied until a final inspection approval is obtained.

DECKING REQUIREMENTS

All decking material shall be composed of 2x6 or 5/4 ("five-quarter") board per **TABLE R507.4**. Attach decking to each joist with 2-8d nails or 2-#8 screws. See **FIGURE 6** on Sheet 6 for decking connection requirements at the rim joist. Decking may be placed from an angle perpendicular to the joists to an angle of 45 degrees to the joists per **TABLE R507.4**.

TABLE R507.4
MAXIMUM JOIST SPACING (inches)

MATERIAL TYPE AND NOMINAL SIZE	MAXIMUM JOIST SPACING	
	PERPENDICULAR TO JOIST	DIAGONAL TO JOIST[a]
5/4-inch thick wood	16	12
2-inch thick wood	24	16
Wood/plastic composite	Per R507.3	Per R507.3

For SI: 1 inch = 25.4 mm
a. Maximum angle of 45 degrees from perpendicular for wood deck boards.

An evaluation report for composite materials must be on the jobsite and available to the inspector during the inspection process. Installation and span lengths of the substituted material must be in strict conformance with the evaluation report and the manufacturer's instructions. All decking products must be capable of supporting a life load of 40 pounds per square foot. Wood/plastic composite decking shall meet **ASTM D7032**.

Town of Colonial Beach
VIRGINIA

Typical Deck Details
Based on the 2012 Virginia Construction Code
Updated 4/26/2016 rev. 1 Sheet 2 of 18

JOIST SIZE

The span of a joist is measured from the centerline of bearing at one end of the joist to the centerline of bearing at the other and does not include the length of the overhangs. Use **TABLE R507.5** to determine your joist span based on lumber size and joist spacing. See **FIGURE R507.5** for joist span types.

TABLE R507.5
DECK JOIST SPANS[a] AND CANTILEVERS[a] FOR COMMON LUMBER SPECIES

SPECIES[b]	SIZE	ALLOWABLE JOIST SPAN[c]			ALLOWABLE CANTILEVER[d,e]		
		Spacing of deck joists (inches)			Spacing of deck joists (inches)		
		12	16	24	12	16	24
Southern pine	2 x 6	9-11	9-0	7-7	1-3	1-4	1-6
	2 x 8	13-1	11-10	9-8	2-1	2-3	2-5
	2 x 10	16-2	14-0	11-5	3-4	3-6	2-10
	2 x 12	18-0	16-6	13-6	4-6	4-2	3-4
Douglas fir-larch[f], hem-fir[f], spruce-pine-fir[f]	2 x 6	9-6	8-4	6-10	1-2	1-3	1-5
	2 x 8	12-6	11–1	9-1	1-11	2-1	2-3
	2 x 10	15-8	13–7	11-1	3-1	3-5	2-9
	2 x 12	18-0	15–9	12-10	4-6	3-11	3-3
Redwood, western cedars, ponderosa pine[g], red pine[g]	2 x 6	8-10	8-0	6-10	1-0	1-1	1-2
	2 x 8	11-8	10–7	8-8	1-8	1-10	2-0
	2 x 10	14-11	13–0	10-7	2-8	2-10	2-8
	2 x 12	17-5	15-1	12-4	3-10	3-9	3-1

For SI: 1 inch = 25.4 mm, 1 foot = 304.8 mm.

a. Spans and cantilevers are given in feet and inches.
b. No. 2 grade with wet service factor.
c. Ground snow load, live load = 40 psf, dead load = 10 psf, $L/\Delta = 360$.
d. Ground snow load, live load = 40 psf, dead load = 10 psf, $L/\Delta = 360$ at main span, $L/\Delta = 180$ at cantilever with a 220 pound point load applied to end.
e. Maximum allowable cantilever shall not exceed one-fourth of the actual joist span.
f. Includes incising factor.
g. Northern species with no incising factor.

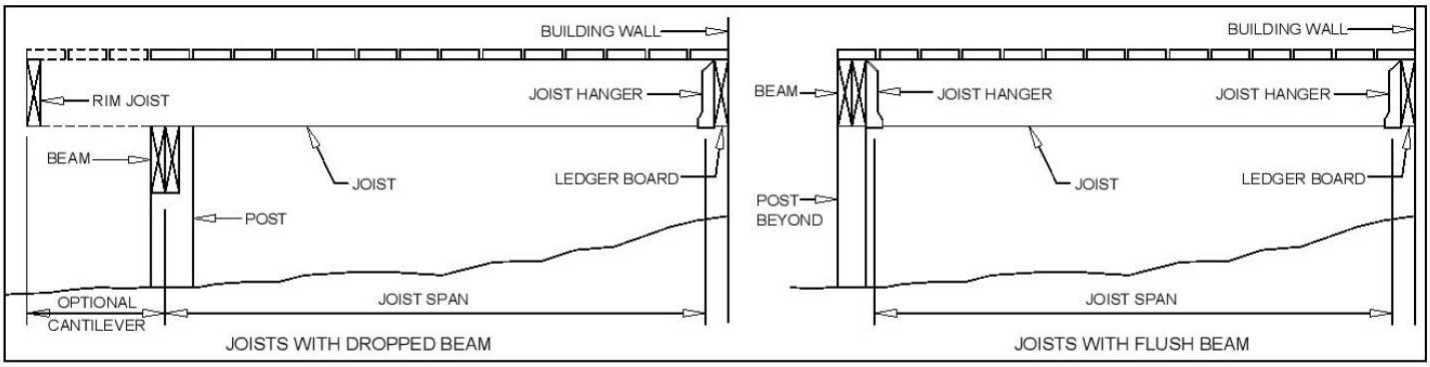

FIGURE R507.5
TYPICAL DECK JOIST SPANS

Town of Colonial Beach
VIRGINIA

Typical Deck Details
Based on the 2012 Virginia Construction Code
Updated 4/26/2016 rev. 1 Sheet 3 of 18

BEAM SIZE & ASSEMBLY REQUIREMENTS

Use **TABLE R507.6** for beam size and span. See **FIGURE R507.6** for beam span types.

TABLE R507.6
DECK BEAM SPAN[a] LENGTHS[b,c]

SPECIES[d]	SIZE[e]	DECK JOIST SPAN (feet) LESS THAN OR EQUAL TO:						
		6	8	10	12	14	16	18
Southern pine	2-2x6	6-11	5-11	5-4	4-10	4-6	4-3	4-0
	2-2x8	8-9	7-7	6-9	6-2	5-9	5-4	5-0
	2-2x10	10-4	9-0	8-0	7-4	6-9	6-4	6-0
	2-2x12	12-2	10-7	9-5	8-7	8-0	7-6	7-0
	3-2x6	8-2	7-5	6-8	6-1	5-8	5-3	5-0
	3-2x8	10-10	9-6	8-6	7-9	7-2	6-8	6-4
	3-2x10	13-0	11-3	10-0	9-2	8-6	7-11	7-6
	3-2x12	15-3	13-3	11-10	10-9	10-0	9-4	8-10
Douglas fir-larch[f], hem-fir[f], spruce-pine-fir[f], redwood, western cedars, ponderosa pine[g], red pine[g]	3x6 or 2-2x6	5-5	4-8	4-2	3-10	3-6	3-1	2-9
	3x8 or 2-2x8	6-10	5-11	5-4	4-10	4-6	4-1	3-8
	3x10 or 2-2x10	8-4	7-3	6-6	5-11	5-6	5-1	4-8
	3x12 or 2-2x12	9-8	8-5	7-6	6-10	6-4	5-11	5-7
	4x6	6-5	5-6	4-11	4-6	4-2	3-11	3-8
	4x8	8-5	7-3	6-6	5-11	5-6	5-2	4-10
	4x10	9-11	8-7	7-8	7-0	6-6	6-1	5-8
	4x12	11-5	9-11	8-10	8-1	7-6	7-0	6-7
	3-2x6	7-4	6-8	6-0	5-6	5-1	4-9	4-6
	3-2x8	9-8	8-6	7-7	6-11	6-5	6-0	5-8
	3-2x10	12-0	10-5	9-4	8-6	7-10	7-4	6-11
	3-2x12	13-11	12-1	10-9	9-10	9-1	8-6	8-1

For SI: 1 inch = 25.4 mm, 1 foot = 304.8 mm.

a. Spans are given in feet and inches.
b. Ground snow load, live load = 40 psf, dead load = 10 psf, L/Δ = 360 at main span, L/Δ = 180 at cantilever with a 220 pound point load applied at the end.
c. Beams supporting deck joists from one side only.
d. No. 2 grade, wet service factor.
e. Beam depth shall be greater than or equal to depth of joists with a flush beam condition.
f. Includes incising factor.
g. Northern species with no incising factor.

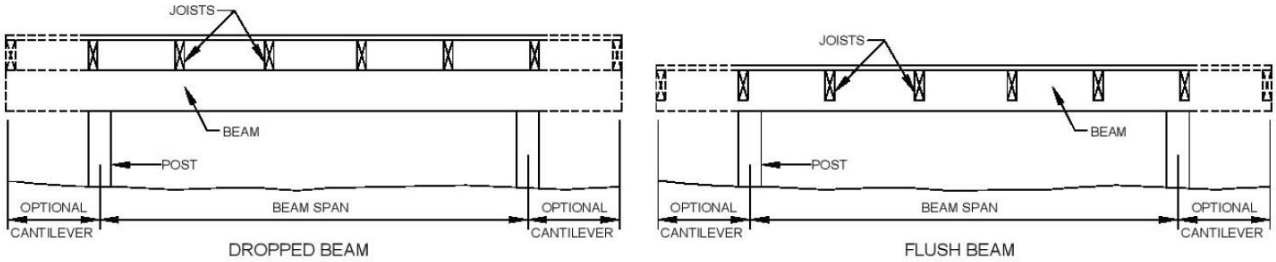

FIGURE R507.6
TYPICAL DECK BEAM SPANS

Joists may bear atop the beam, as shown in **FIGURE R507.6** above, and extend past the beam centerline up to 3'-0", as shown in **FIGURE R507.5** on Sheet 3, or the joists may attach to the side of the beam with joist hangers. See JOIST-TO-BEAM CONNECTION DETAIL, **FIGURE 3** on Sheet 5.

The deck's beam is assembled by attaching the two members identified in the tables above in accordance with **FIGURE 1**.

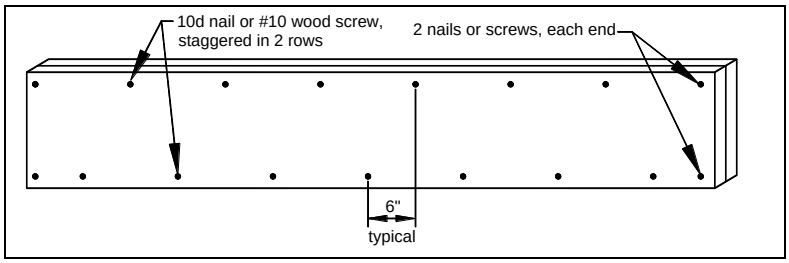

FIGURE 1: BEAM ASSEMBLY DETAIL

Town of Colonial Beach
VIRGINIA

Typical Deck Details

Based on the 2012 Virginia Construction Code

DECK FRAMING PLAN

A framing plan shows a bird's-eye view of the joist and beam layout; the location of the ledger board, posts and footings, and the type, size, and spacing of the ledger board fasteners. See **FIGURE 2** for an example of a typical deck framing plan.

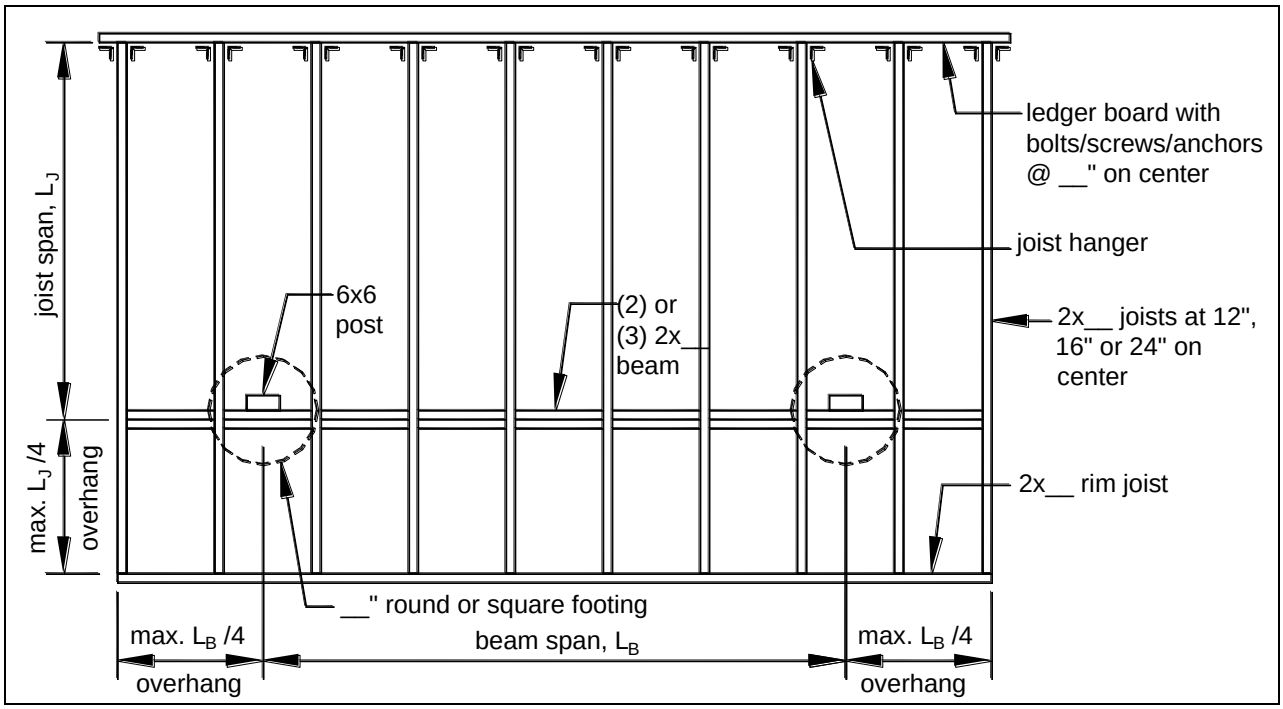

FIGURE 2: TYPICAL DECK FRAMING PLAN

JOIST-TO-BEAM CONNECTION

Each joist shall be attached to the beam as shown in **FIGURE 3**. Joists may bear on and overhang past the beam a maximum of 3'-0". Use Option 1 or Option 2 to attach the joist to the beam. Joists may also attach to the side of the beam with joist hangers. See JOIST HANGERS, **FIGURE 4** on Sheet 6 for more information. Hangers, clips and mechanical fasteners shall be galvanized with 1.85 oz/sf of zinc (G-185 coating) or shall be stainless steel.

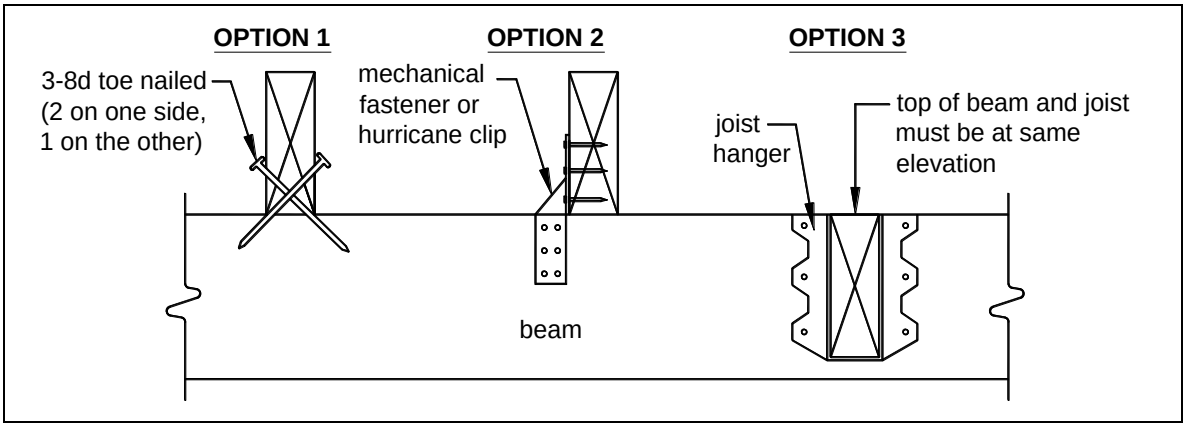

FIGURE 3: **JOIST-TO-BEAM CONNECTION DETAIL**

Town of Colonial Beach

VIRGINIA

Typical Deck Details

Based on the 2012 Virginia Construction Code

JOIST HANGERS

Joist hangers, as shown in **FIGURE 4**, shall each have a minimum capacity of 1000 lbs. The depth and width of the joist hanger shall equal the dimensions of the joist or header it is carrying. Joist hangers shall be galvanized with 1.85 oz/sf of zinc (G-185 coating) or stainless steel.

Use joist hangers with inside flanges when clearances to the edge of the beam or ledger board dictate. **Do not use clip angles or brackets to support framing members.**

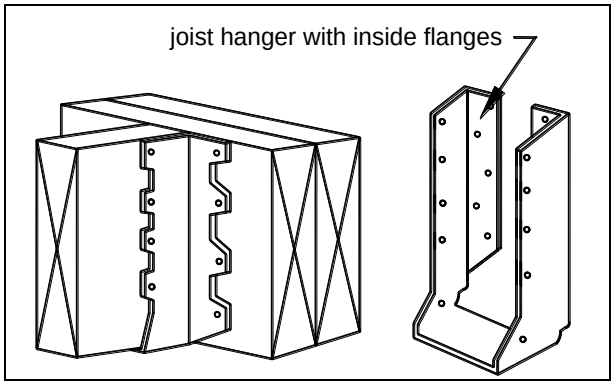

FIGURE 4: TYPICAL JOIST HANGERS

POST REQUIREMENTS

All deck post sizes shall be 6x6 with the maximum height of 14'-0", or 4x4 with the maximum height of 8'-0". The beam shall be attached to the post by notching the 6x6 as shown **FIGURE 5** or the use of an approved cap connector. **Notching of 4x4s is not permitted.** All thru-bolts shall have washers at the bolt head and nut.

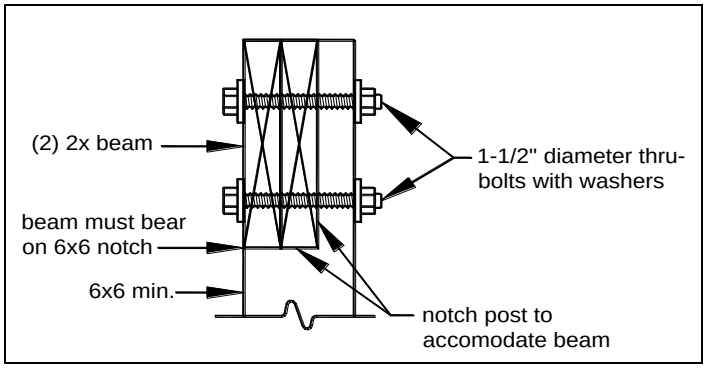

FIGURE 5: POST-TO-BEAM REQUIREMENT

RIM JOIST REQUIREMENTS

Attach a continuous rim joist to the ends of joists as shown in **FIGURE 6**. Attach decking to the rim joist as shown in **FIGURE 6**. For more decking attachment requirements, see DECKING REQUIREMENTS on Sheet 2.

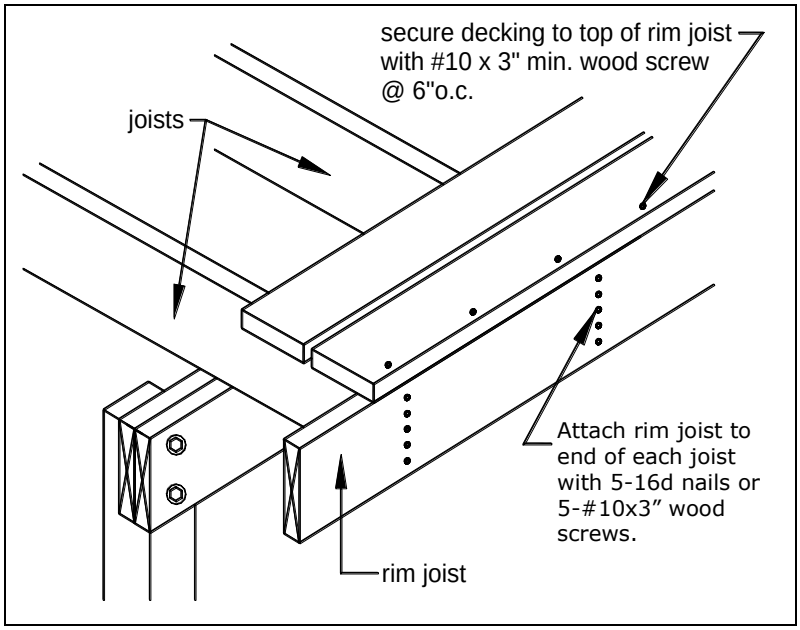

FIGURE 6: RIM JOIST CONNECTION DETAILS

FOOTINGS

See **TABLE 1** and **FIGURE R507.8.1** on Sheet 7 for footing size, footing thickness and post attachment options and requirements. All footings shall bear on solid ground; bearing conditions shall be verified in the field by town inspectors or approved 3rd party agency prior to placement of concrete. DECK FOOTINGS CLOSER THAN 5'-0" TO AN EXISTING EXTERIOR HOUSE WALL MUST BEAR AT THE SAME ELEVATION AS THE FOOTING OF THE EXISTING HOUSE FOUNDATION.

Do not construct footings over utility lines or enclosed meters. Call Miss Utility at 1-800-552-7001 before you dig.

Town of Colonial Beach
VIRGINIA

Typical Deck Details

Based on the 2012 Virginia Construction Code

TABLE 1: FOOTING SIZE

Beam Span, L_B	Joist Span, L_J	Footing Size		Minimum Thickness
		Square	Round	
0 – 8'-0"	0 - 10'-0"	16"	18"	8"
	10'-1" - 14'-0"	16"	18"	8"
	14'-1" - 18'-0"	18"	20"	10"
8'-1" – 12'-0"	0 - 10'-0"	16"	18"	8"
	10'-1" - 14'-0"	22"	24"	10"
	14'-1" - 18'-0"	22"	24"	10"
12'-1" – 17'-5"	0 - 10'-0"	22"	24"	10"
	10'-1" - 14'-0"	24"	26"	12"

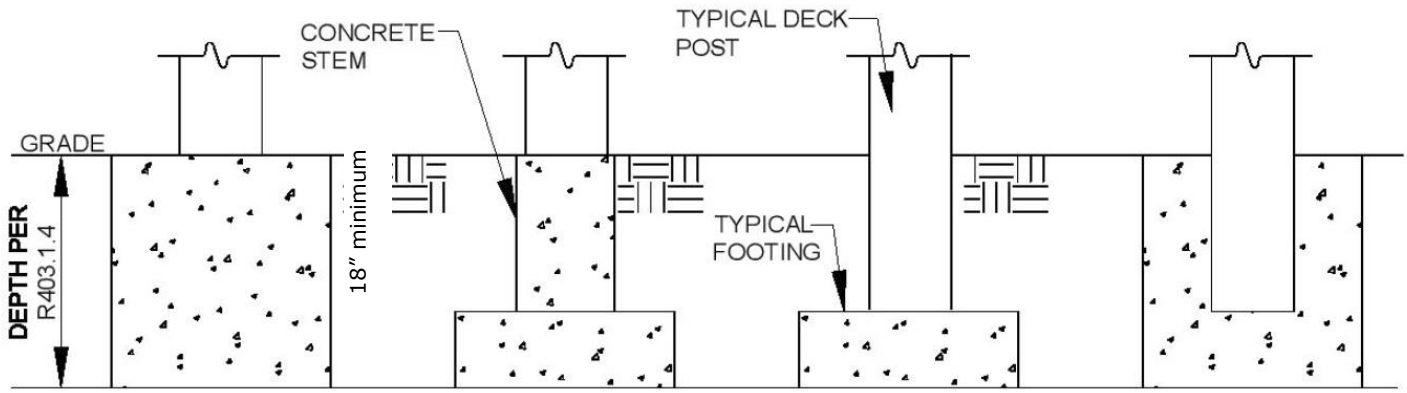

FIGURE R507.8.1
TYPICAL DECK POSTS TO DECK FOOTINGS

LEDGER ATTACHMENT REQUIREMENTS

GENERAL: Attach the ledger board, which shall be a minimum 2x8 ledger board, to the existing exterior wall in accordance with **FIGURE 8** through **FIGURE 10**. When attachments are made to the existing house band board, the band board shall be capable of supporting the new deck. If this cannot be verified or conditions at the existing house differ from the details herein, then a free-standing deck is required. See FREE-STANDING DECKS on Sheet 11.

YOU MUST VERIFY THE EXISTING CONDITIONS IN THE FIELD PRIOR TO APPLYING FOR A BUILDING PERMIT. COMPLIANCE WITH ALL THE REQUIREMENTS HEREIN IS CRITICAL TO ENSURE THE STRUCTURAL STABILITY OF YOUR DECK AND THE SAFETY OF YOU AND YOUR FAMILY.

SIDING AND FLASHING: House siding, or the exterior finish system, must be removed prior to the installation of the ledger board. Flashing is required at any ledger board connection to a wall of wood framed construction and shall be composed of copper (attached using copper nails), stainless steel, UV resistant plastic, or galvanized steel coated with 1.85 oz/sf of zinc (G-185 coating). See **FIGURE 8** for continuous flashing with drip edge.

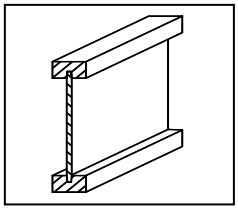

FIGURE 7: MWJ PROFILE

MANUFACTURED WOOD JOIST: The term "MWJ" denotes manufactured wood "I" joists; see **FIGURE 7**. Examples of manufactured wood joists are TJI, GPI, and LPI.

Many new homes constructed with MWJs include a 1-$^1/_4$" manufactured solid band board that can support the attachment of a deck; see **FIGURE 8**. However, older homes constructed with MWJs may only include a plywood band board which cannot support a deck. In such cases a free-standing deck or a full plan submission is required.

Town of Colonial Beach
VIRGINIA

Typical Deck Details
Based on the 2012 Virginia Construction Code

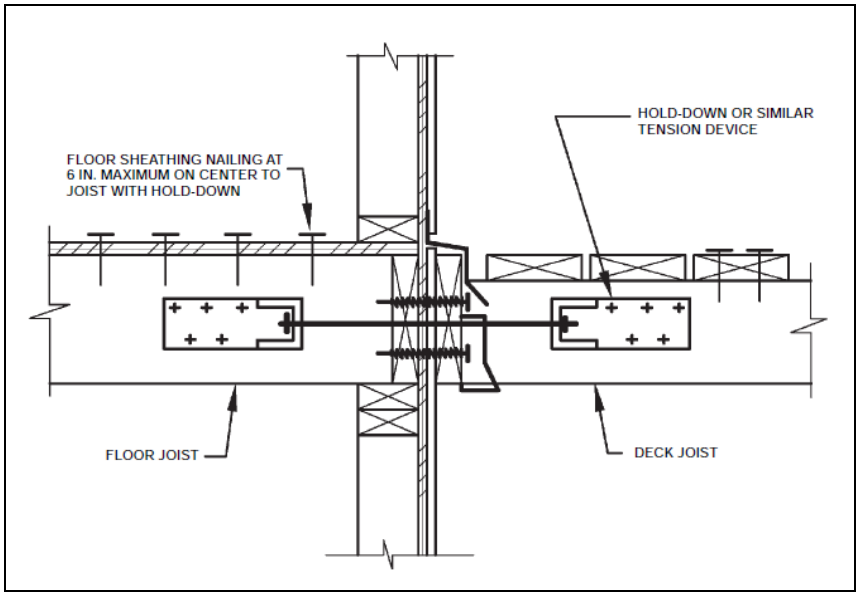

FIGURE 8: ATTACHMENT OF LEDGER BOARD-TO-BAND BOARD WITH HOLD DOWN TENSION DEVICES

***Note: 2 hold downs are required per deck and must have an allowable stress design capacity of not less than 1500 lbs. per device. If hold downs cannot be installed, diagonal braces must be installed for lateral support as shown in FIGURE 17 or the deck must be freestanding.

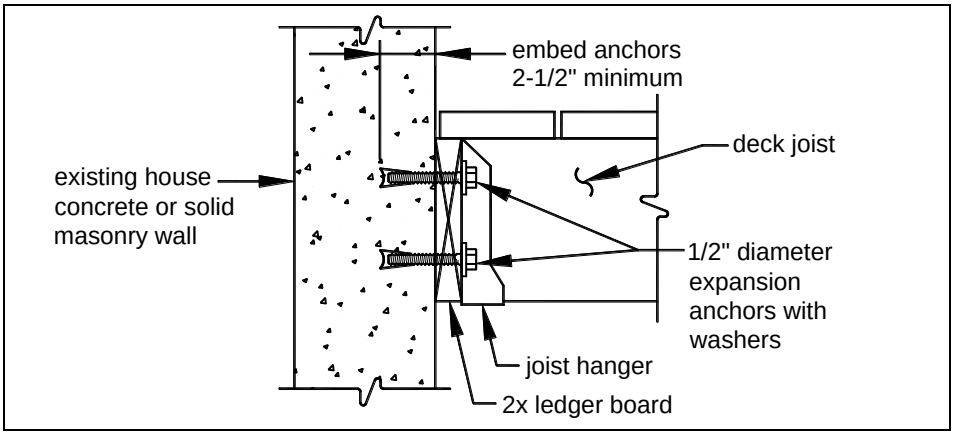

FIGURE 9: ATTACHMENT OF LEDGER BOARD-TO-FOUNDATION WALL (CONCRETE OR SOLID MASONRY)

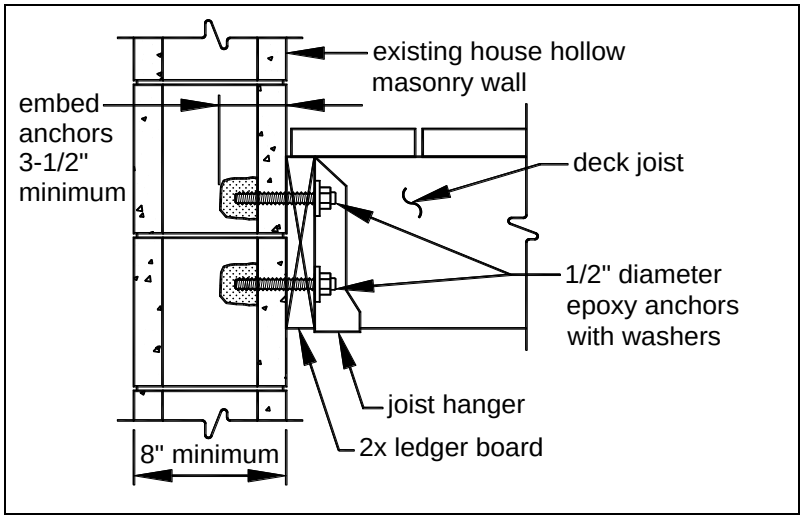

FIGURE 10: ATTACHMENT OF LEDGER BOARD-TO-FOUNDATION WALL (HOLLOW MASONRY)

Town of Colonial Beach
VIRGINIA

Typical Deck Details

Based on the 2012 Virginia Construction Code

PROHIBITED LEDGER ATTACHMENTS

Attachments to the ends of pre-manufactured open web joists, to brick veneers, and to house overhangs or bay windows are strictly prohibited; see **FIGURE 11** through **FIGURE 13**. In such cases the deck shall be free-standing. See FREE-STANDING DECKS on Sheet 11.

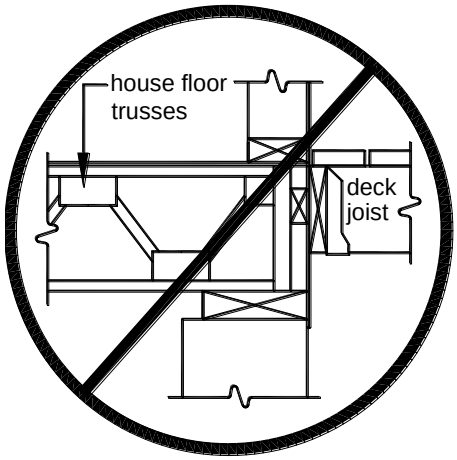

FIGURE 11: NO ATTACHMENT TO OPEN WEB TRUSSES

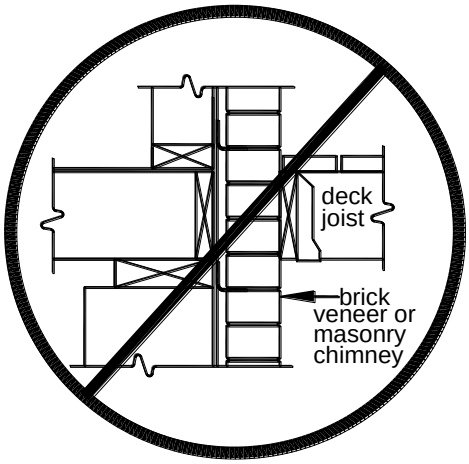

FIGURE 12: NO ATTACHMENT TO OR THRU BRICK VENEER

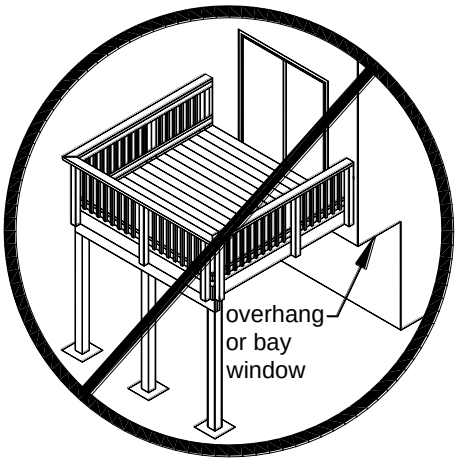

FIGURE 13: NO ATTACHMENT TO HOUSE OVERHANG

LEDGER BOARD FASTENERS

The spacing between ledger board fasteners is dependent on the span length of the joists. Use **TABLE 2** to determine fastener spacing and install in the configuration shown in **FIGURE 14**. All fasteners shall be installed with washers and must be thoroughly tightened. Adequacy of connections will be verified by town inspectors. If a ladder is required to access the ledger board, one must be provided by the property owner, permit holder, or their representative.

TABLE 2: LEDGER BOARD FASTENER SPACING[1]

Fastener	Band Board Material[2]	Joist Span						
		0 to 6'-0"	6'-1" to 8'-0"	8-1' to 10'-0"	10'-1" to 12'-0"	12'-1" to 14'-0"	14'-1" to 16'-0"	16'-1" to 18'-0"
		Spacing of Fasteners, on center						
Lag Screws	1" EWP	24"	18"	14"	12"	10"	9"	8"
	1-1/8" EWP	28"	21"	16"	14"	12"	10"	9"
	2x lumber	30"	23"	18"	15"	13"	11"	10"
Through Bolts	1" EWP	24"	18"	14"	12"	10"	9"	8"
	1-1/8" EWP	28"	21"	16"	14"	12"	10"	9"
	2x lumber	36"	36"	34"	29"	24"	21"	19"
LedgerLok Screws	1" EWP	12"	9"	7"	6"	5"	N/A	N/A
	1-1/8" EWP	12"	9"	7"	6"	5"	N/A	N/A
	2x lumber	12"	9"	7"	6"	5"	N/A	N/A
Expansion Anchors		36"	36"	34"	29"	24"	21"	19"
Approved Epoxy Anchors		32"	32"	32"	24"	24"	16"	16"

[1]See Sheet 10 for fastener specifications.
[2]EWP = manufactured engineered wood product

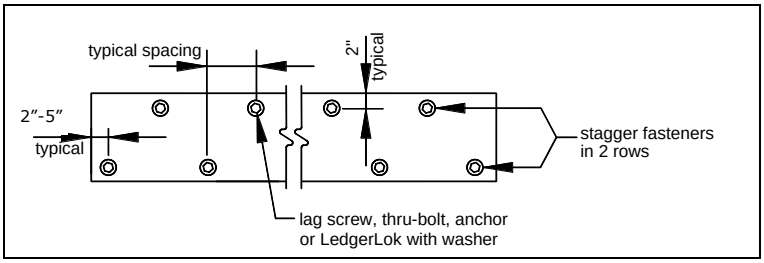

FIGURE 14: LEDGER BOARD FASTENER SPACING AND CLEARANCES

Town of Colonial Beach
VIRGINIA

Typical Deck Details

Based on the 2012 Virginia Construction Code

Thru-Bolts
Thru-bolts shall have a minimum diameter of $^1/_2$". Pilot holes for thru-bolts shall be $^{17}/_{32}$" to $^9/_{16}$" in diameter. Thru-bolts must be equipped with washers at the bolt head and nut.

Expansion Anchors
Use expansion anchors when attaching a ledger board to a concrete or solid masonry wall as shown in FIGURE 9. Bolt diameters of the anchors shall be a minimum of $^1/_2$"; in some cases, this may require an anchor size of $^5/_8$". Minimum embedment length shall be $2^1/_2$". Expansion anchors must have washers.

Epoxy Anchors
When attaching to hollow masonry, fill the cells with grout and use expansion anchors, or use one of the approved epoxy anchors listed in **Table 3** and install as shown in **FIGURE 10**. Epoxy anchors shall have a minimum diameter of $^1/_2$" and minimum embedment length of $3^1/_2$". Installation shall be in strict conformance to the manufacturer's instructions. Epoxy anchors must have washers.

Table 3: APPROVED EPOXY ANCHORS

Manufacturer	Product
ITW Ramset/Red Head	Epcon Acrylic 7
Hilti	HY-20

Lag Screws
Lag screws shall have a minimum diameter of $^1/_2$" and shall be hot-dipped galvanized or stainless steel. Lag screws may be used only when the field conditions match those shown in FIGURE 8. **You must verify the existing conditions in the field prior to applying for a building permit and installing lag screws. Compliance with all the requirements herein is critical to ensure the structural stability of your deck.** See **FIGURE 15** for lag screw length and shank requirements. All lag screws shall be installed with washers.

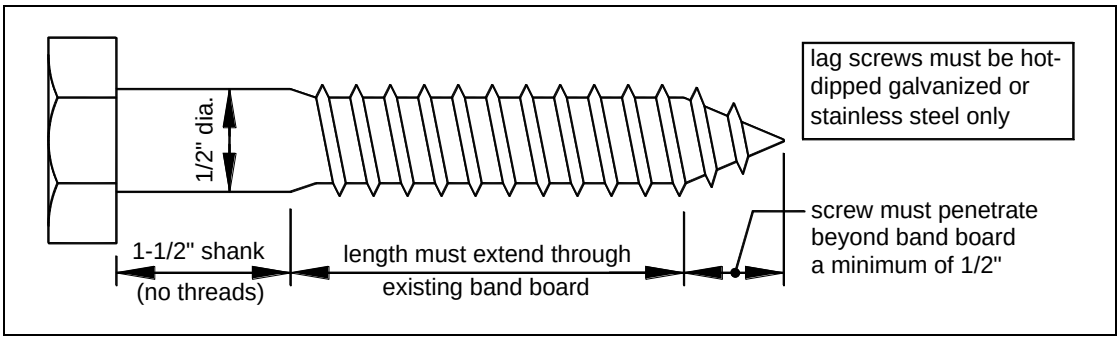

FIGURE 15: LAG SCREW REQUIREMENTS

Lag screw installation requirements: Each lag screw shall have pilot holes drilled as follows: 1) Drill a $^1/_2$" diameter hole in the ledger board; 2) Drill a $^5/_{16}$" diameter hole into the solid connection material of the existing house. DO NOT DRILL A $^1/_2$" DIAMETER HOLE INTO THE SOLID CONNECTION MATERIAL.

The threaded portion of the lag screw shall be inserted into the pilot hole by turning. DO NOT DRIVE WITH A HAMMER. Use soap or a wood-compatible lubricant as required to facilitate tightening. Each lag screw shall be thoroughly tightened.

LedgerLok
LedgerLok by FastenMaster, a proprietary fastener listed by ICC-ES, is similar to a lag screw. LedgerLoks have a diameter less than $^1/_4$" and an integrated washer. No pilot hole is required for installation. LedgerLoks shall be of sufficient length to fully penetrate the existing house band board and shall be installed in strict conformance with the manufacturer's instructions.

FREE-STANDING DECKS

Decks which are free-standing do not utilize the exterior wall of the existing house to support vertical loads; instead, an additional beam with posts is provided at or within 3'-0" of the existing house. THE ASSOCIATED DECK POST FOOTINGS SHALL BE PLACED AT THE SAME ELEVATION AS THE EXISTING HOUSE FOOTING. See **FIGURE 16**. Beam size is determined by **TABLE R507.6** on Sheet 4.

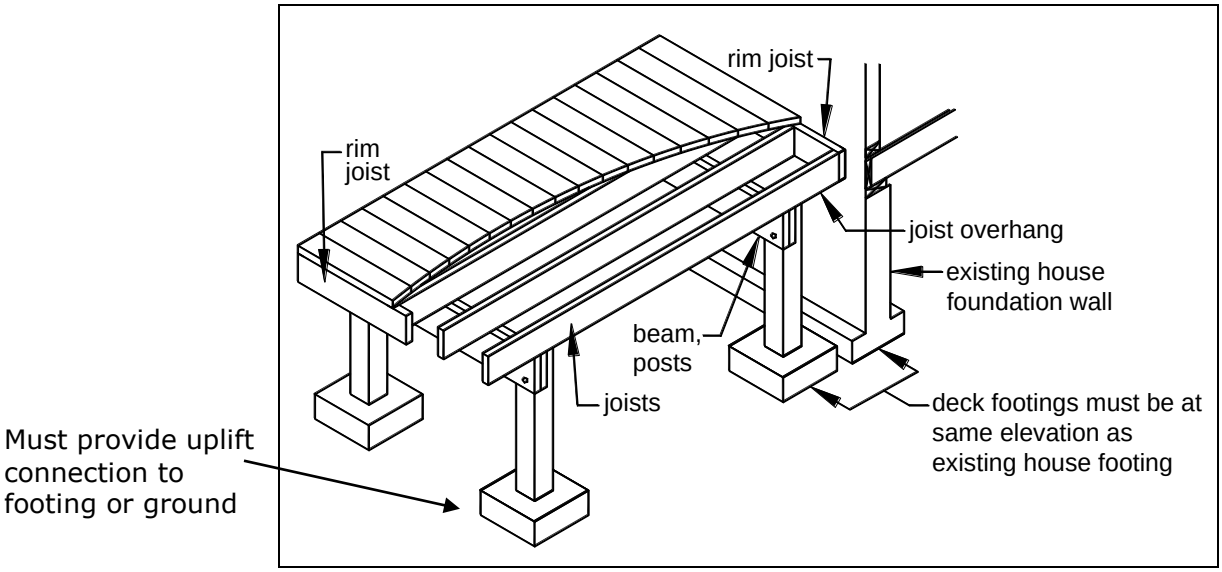

FIGURE 16: FREE-STANDING DECK

LATERAL SUPPORT OF FREE-STANDING DECKS

Free standing decks greater than 2 feet above grade shall resist lateral loading and horizontal movement by providing diagonal bracing or by attaching to the exterior wall of the house per **FIGURE 18** on Sheet 12.

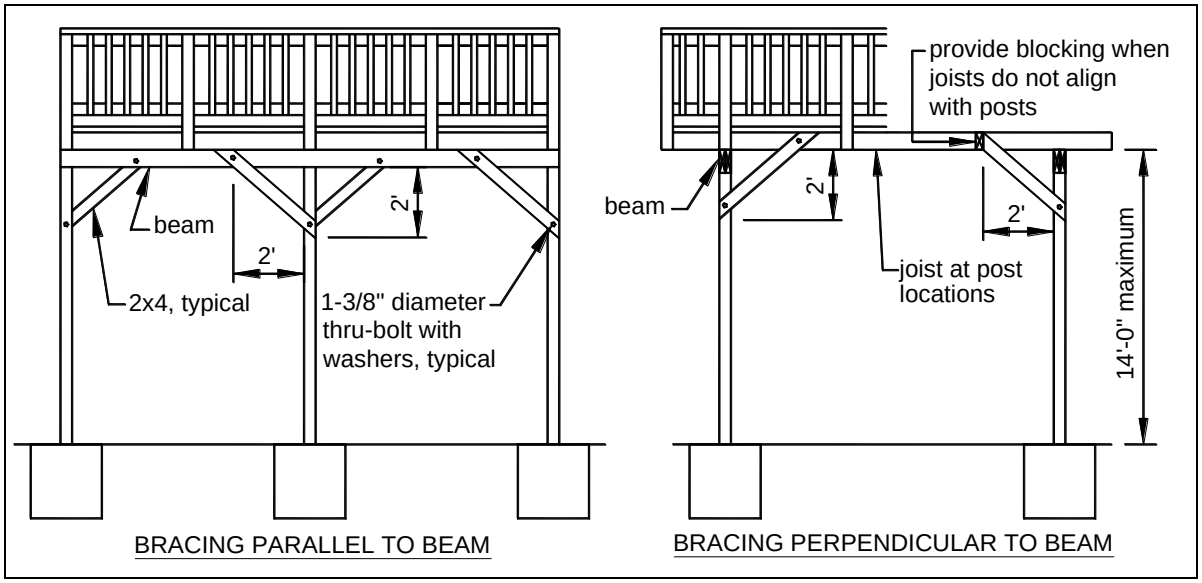

FIGURE 17: DIAGONAL BRACING REQUIREMENTS

Diagonal Bracing: Provide diagonal bracing both parallel and perpendicular to the beam at each post as shown in FIGURE **17**. When parallel to the beam, the bracing shall be bolted to the post at one end and beam at the other. When perpendicular to the beam, the bracing shall be bolted to the post at one end and a joist at the other. When a joist does not align with the bracing location, provide blocking between the next adjacent joists.

Town of Colonial Beach
VIRGINIA

Typical Deck Details

Based on the 2012 Virginia Construction Code

Attachment To House: Attach the deck rim joist to the existing house exterior wall as shown in **FIGURE 18**. The wall must be sheathed with a minimum $^3/_8$" structural panel sheathing. Use lag screws or thru-bolts when fastening to an existing band board or wall stud; use expansion anchors or epoxy anchors when fastening to concrete or masonry. DO NOT ATTACH TO BRICK VENEERS. YOU MUST VERIFY THIS CONDITION IN THE FIELD PRIOR TO UTILIZING THIS METHOD. Fasteners shall be 16" on center and staggered in 2 rows. Flashing over the rim joist is required and must be installed in accordance with the flashing provisions on Sheet 7.

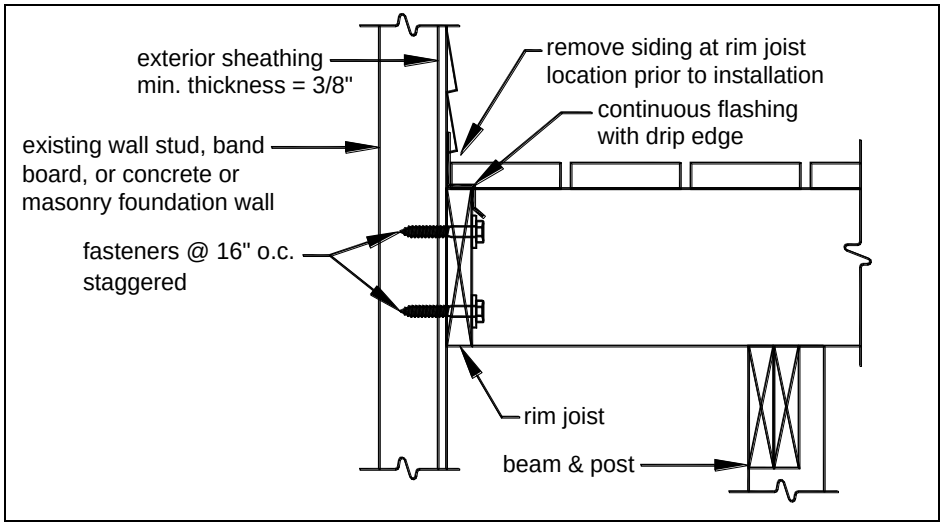

FIGURE 18: **ATTACHMENT TO HOUSE LATERAL SUPPORT**

GUARD REQUIREMENTS

All decks greater than 30" above grade are required to have a guard. If you are providing a guard when one is not required, it must meet these requirements. All guards shall be constructed in strict conformance with details herein; any deviations require a plan submission.

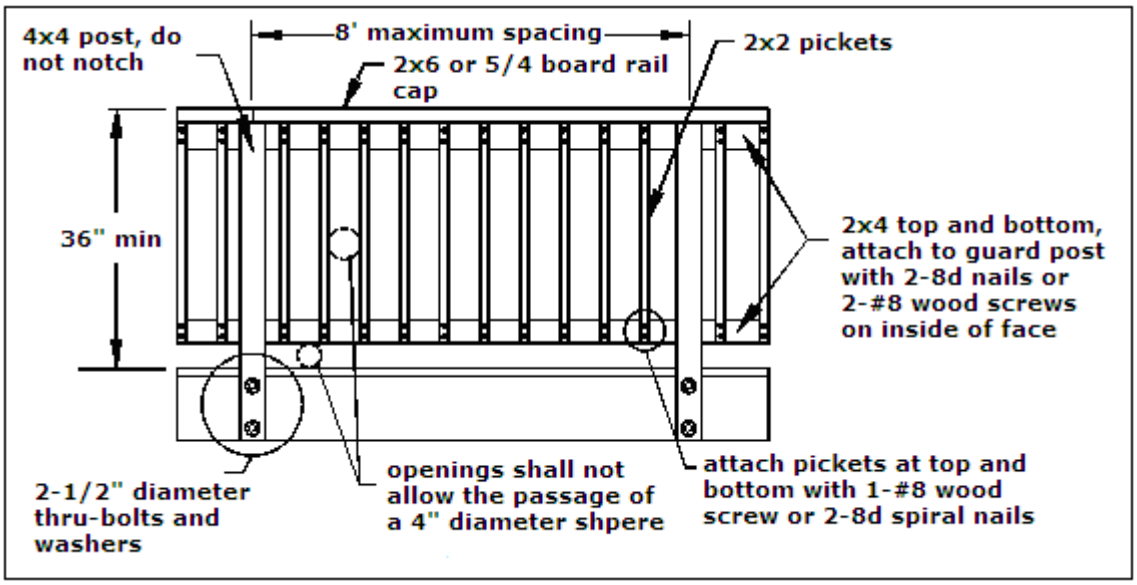

FIGURE 19: TYPICAL GUARD DETAIL

Any pre-fabricated wood, plastic, composite or manufactured guard system purchased from a home center store, lumber company or similar will also require a plan submission.

ONLY THOSE PLASTIC, COMPOSITE, OR MANUFACTURED GUARD SYSTEMS LISTED BY AN ACCREDITED TESTING AGENCY ARE APPROVED FOR USE IN COLONIAL BEACH.

GUARD POST ATTACHMENTS

GUARD POST TO OUTSIDE-JOIST: Guard posts for guards which run parallel to the deck joists (side of deck) shall be attached to the outside-joist per **FIGURE 20**.

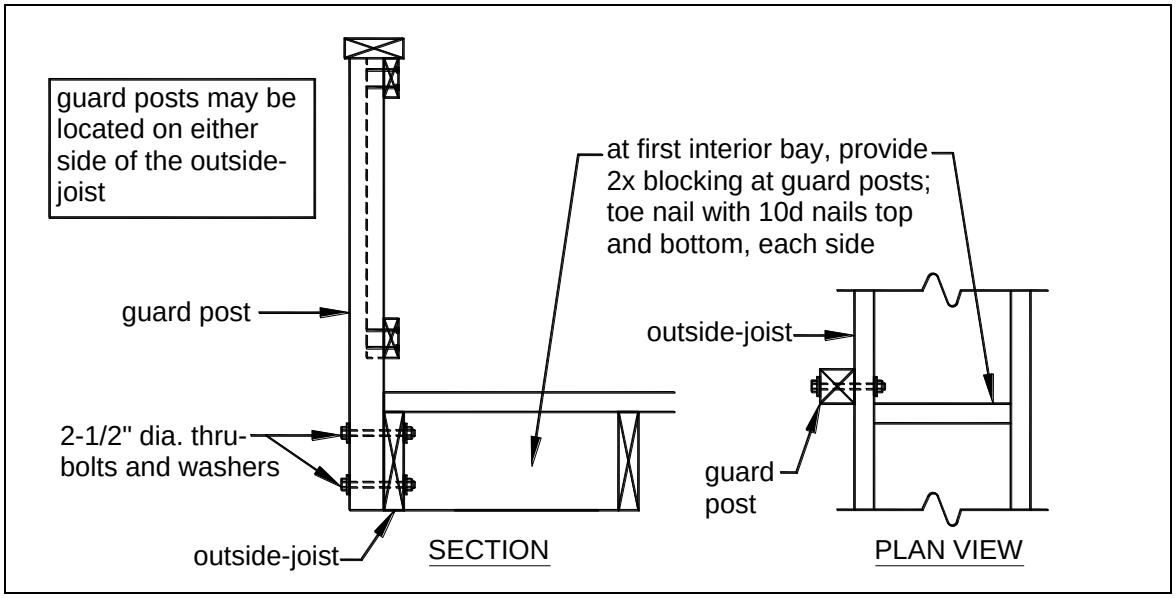

FIGURE 20: GUARD POST TO OUTSIDE JOIST DETAIL

****Note: Do not drill, bolt, or lag in top or bottom 2" of joist/band board at post location.**

GUARD POST TO RIM JOIST: Use one of the options shown in **FIGURE 21** through **FIGURE 23** to attach a guard post to a rim joist. See **FIGURE 6** on Sheet 6 for rim joist-to-deck joist and decking-to-rim joist attachment requirements.

OPTION 1: As shown in **FIGURE 21**, guard posts are attached to the inside face of the rim joists. To attach guard post to the outside of the rim joist, see OPTION 2 or OPTION 3.

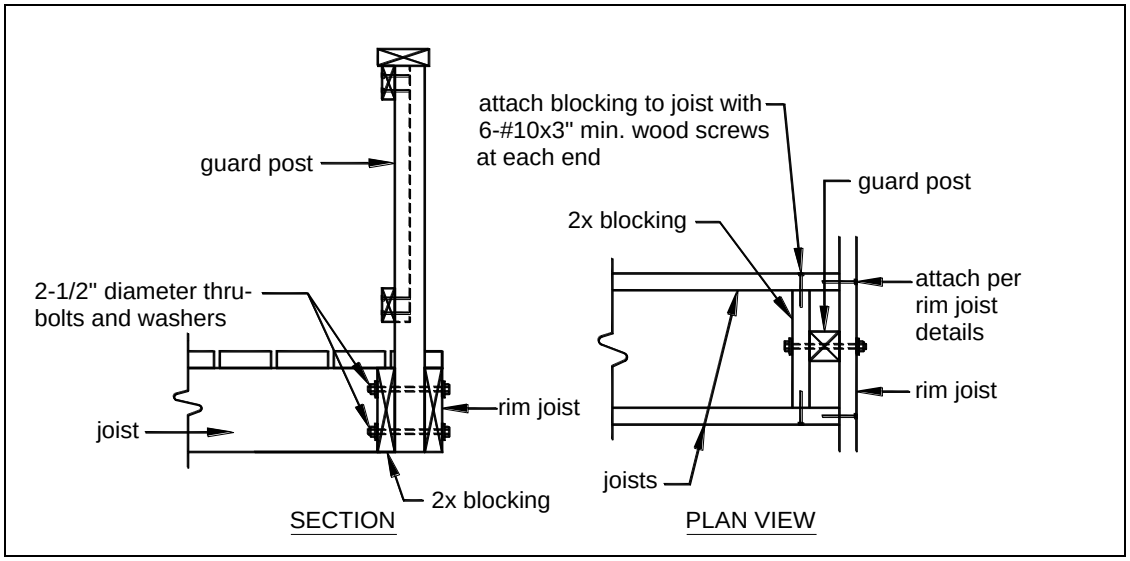

FIGURE 21: GUARD POST TO RIM JOIST DETAIL, OPTION 1

Town of Colonial Beach
VIRGINIA

Typical Deck Details

Based on the 2012 Virginia Construction Code

OPTION 2: As shown in **FIGURE 22**, *hold-down anchors* must be installed to attach the rim joist to the deck joists. Hold-down anchors must be galvanized with 1.85 oz/sf of zinc (G-185 coating) or shall be stainless steel. There shall be a minimum of two bolts at the anchors' attachment to the joist. Look for model number HD2A in a Zmax coating from Simpson Strong-Tie, model number HD2A in a Triple Zinc coating from USP, or the hot-dipped galvanized DeckLok by Morse Technologies. Other hold-down anchor models meeting the minimum requirements may also be used.

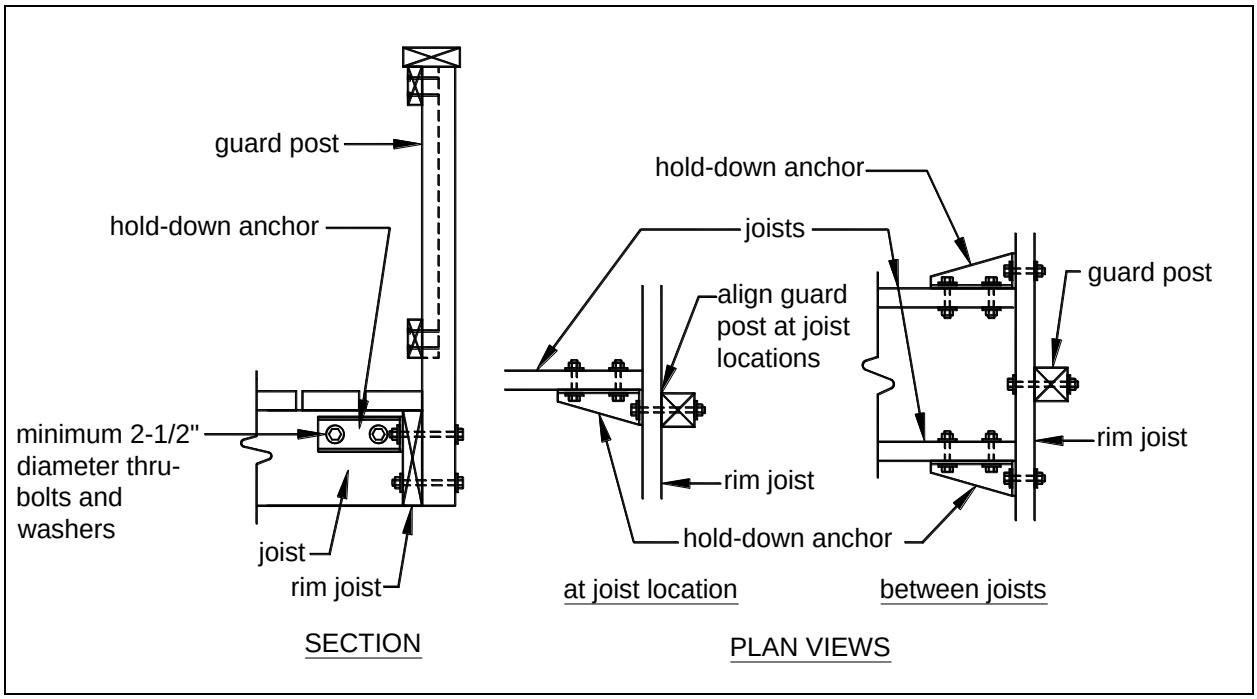

FIGURE 22: GUARD POST TO RIM JOIST DETAIL, OPTION 2

OPTION 3: As shown in FIGURE 23, the rim joist must be fastened to deck joists with two 20 gage *stud tie plates* attached per the manufacturer's instructions with hot-dipped galvanized or stainless steel fasteners. Stud tie plates must be galvanized with 1.85 oz/sf of zinc (G-185 coating) or shall be stainless steel. Look for model number SP1 in a Zmax coating from Simpson Strong-Tie or model number SPT22 in a Triple Zinc coating from USP. Other stud tie plate models meeting the minimum requirements may also be used.

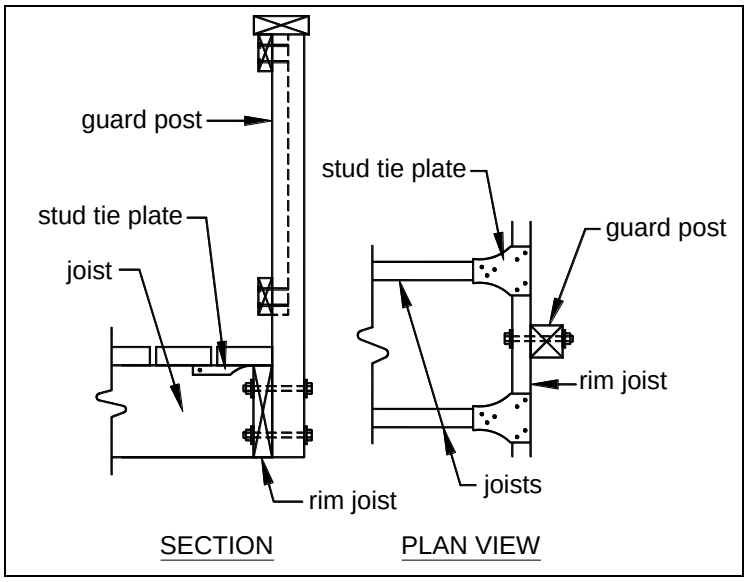

FIGURE 23: GUARD POST TO RIM JOIST DETAIL, OPTION 3

Town of Colonial Beach
VIRGINIA

Typical Deck Details

Based on the 2012 Virginia Construction Code

STAIR REQUIREMENTS

Stairs, stair stringers, and stair guard shall meet the requirements shown in **FIGURE 24** through **FIGURE 31**. All stringers shall be 2x12. Stair stringers shall not span more than the dimensions shown in **FIGURE 25**. If the stringer span exceeds these dimensions, then an intermediate landing will be required. All intermediate stair landings must be designed and constructed as a free-standing deck using the details in this package.

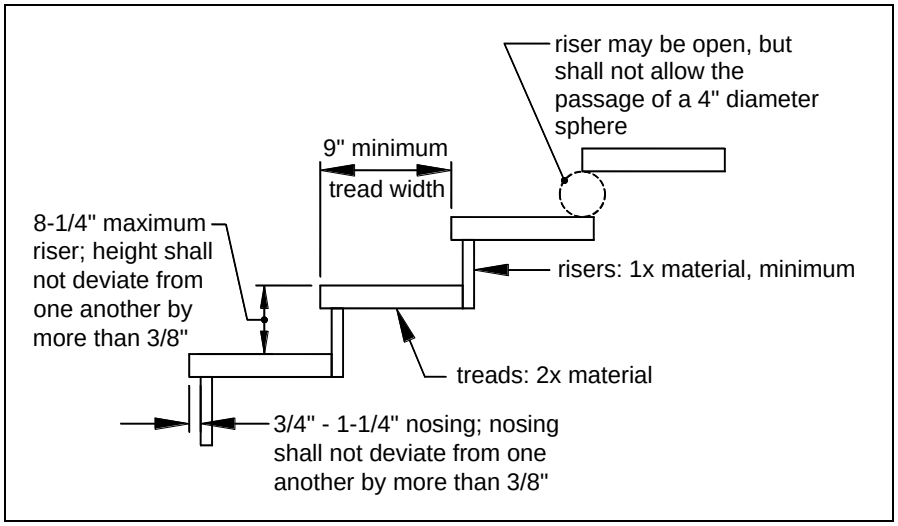

FIGURE 24: TREAD AND RISER DETAIL

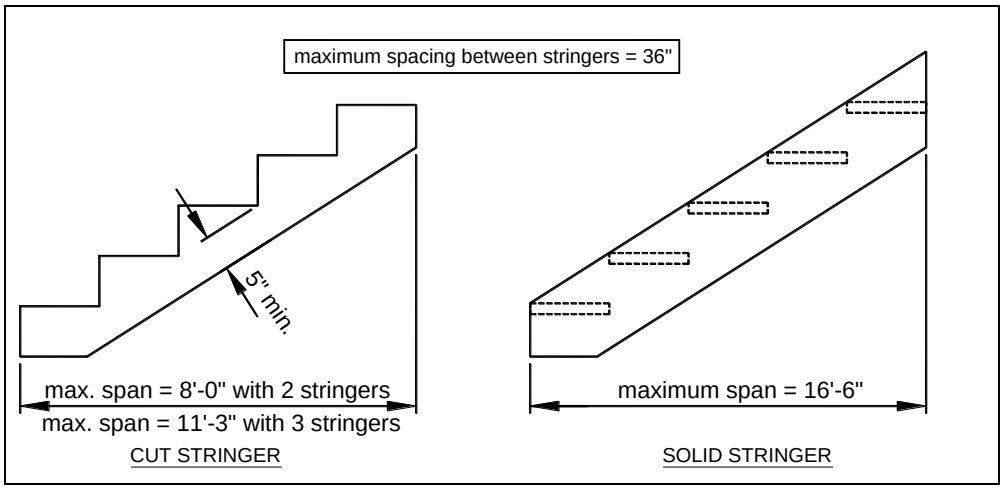

FIGURE 25: STAIR STRINGER REQUIREMENTS

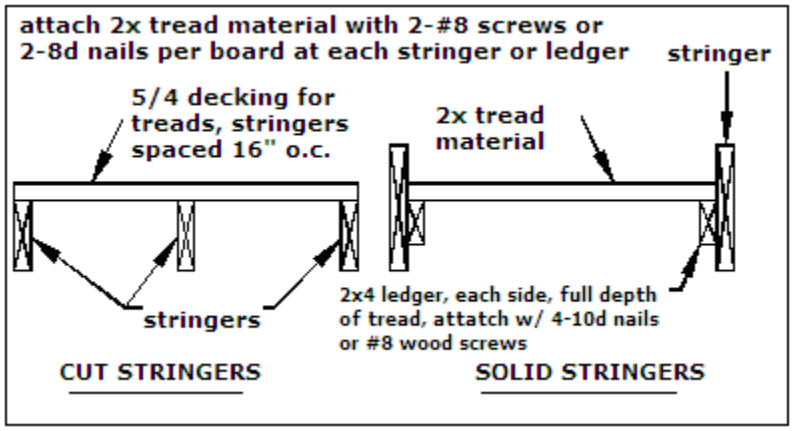

FIGURE 26: TREAD CONNECTION REQUIREMENTS

Town of Colonial Beach
VIRGINIA

Typical Deck Details

Based on the 2012 Virginia Construction Code

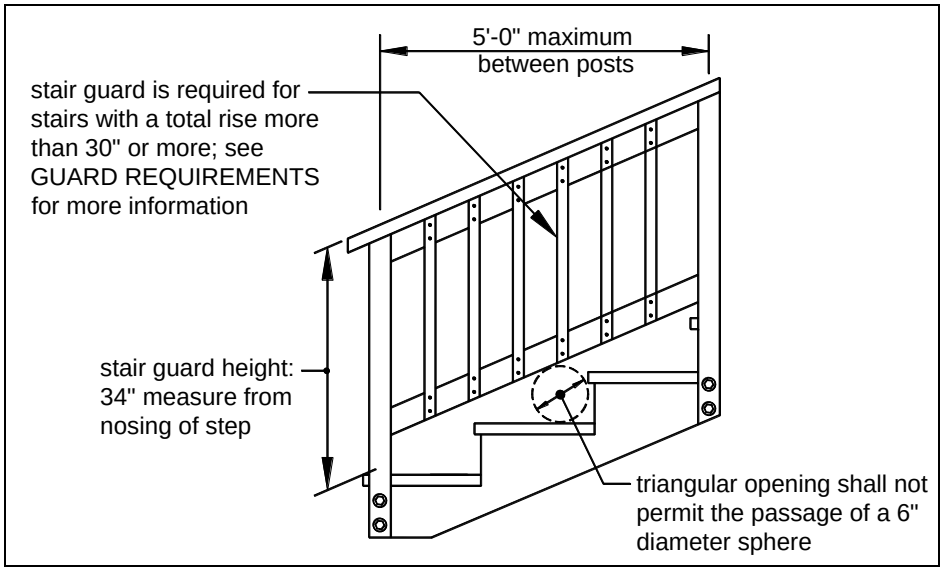

FIGURE 27: STAIR GUARD REQUIREMENTS

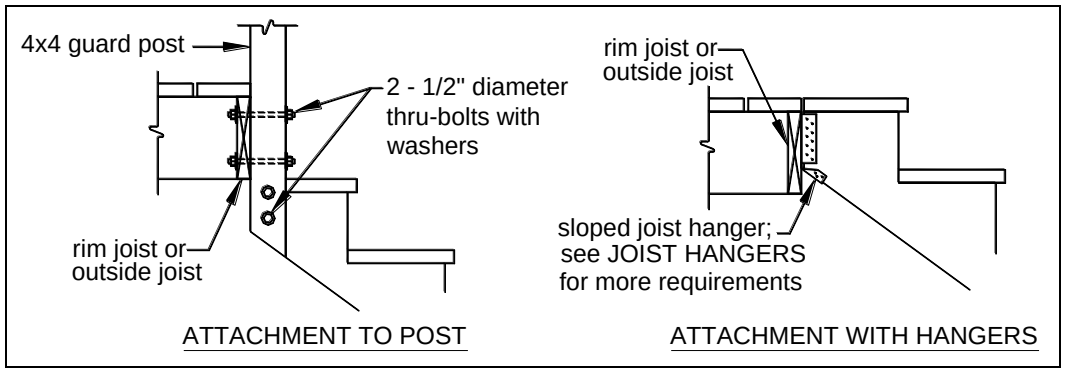

FIGURE 28: STAIR STRINGER ATTACHMENT DETAIL

STAIR HANDRAIL REQUIREMENTS

All stairs with 4 or more risers shall have a handrail on one side. See **FIGURE 29**. Handrails shall be graspable and shall be composed of decay-resistant and/or corrosion resistant material. The hand grip portion, if circular, shall be between $1^1/_4$" and $2^1/_4$" in diameter. Shapes other than circular shall have a perimeter dimension between 4" and $6^1/_4$" with a maximum cross sectional dimension of $2^1/_4$". All shapes shall have a smooth surface with no sharp corners. Handrails shall run continuously from a point directly over the lowest riser to a point directly over the highest riser and shall return to the guard at each end; see **FIGURE 30**. Handrails may be interrupted by guard posts only at a turn in the stair.

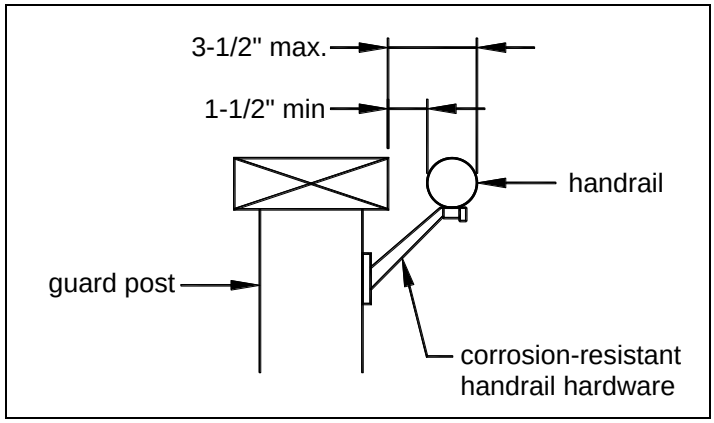

FIGURE 29: HANDRAIL REQUIREMENTS

Town of Colonial Beach
VIRGINIA

Typical Deck Details

Based on the 2012 Virginia Construction Code

STAIR FOOTING REQUIREMENTS

Where the stairway meets grade, attach the stringers to the stair guard posts as shown in **FIGURE 31**. Posts shall bear on footings below frost depth. Stringers shall not bear on new or existing concrete pads or patios that are not founded below frost depth. When guards are not required, see GUARD REQUIREMENTS on Sheet 12, posts may terminate below the bottom tread elevation.

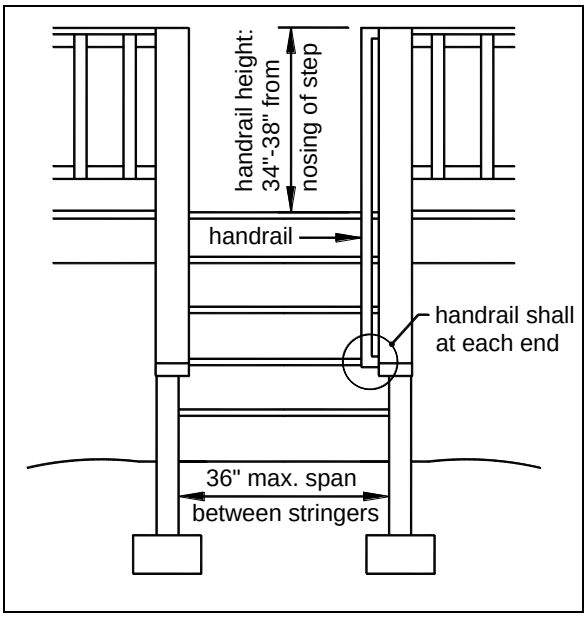

FIGURE 30: MISC. STAIR REQUIREMENTS

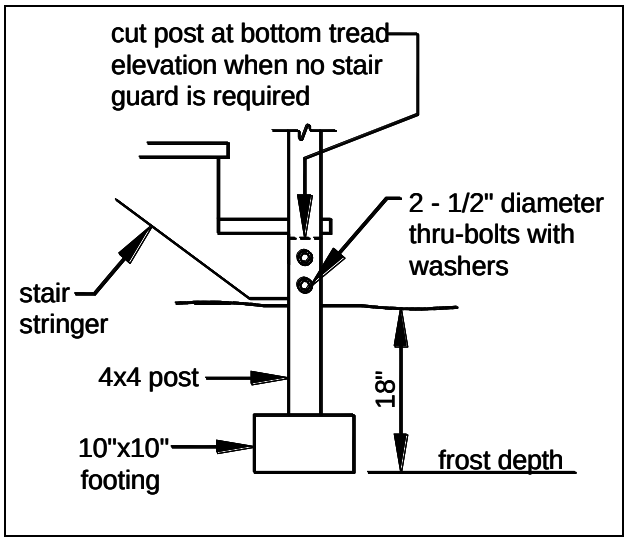

FIGURE 31: STAIR FOOTING DETAIL

STAIR LIGHTING REQUIREMENTS

Stairways shall have a light source located at the top landing and at intermediate landings. The light switch shall be operated from inside the house. However, motion detected or timed switches are acceptable.

FRAMING AT CHIMNEY OR BAY WINDOW

All members at a chimney or bay window shall be framed in accordance with **FIGURE 32**. Headers may span a maximum of 6'-0". When a chimney or bay window is wider than 6'-0", one or more 6x6 posts may be added to reduce header spans to less than 6'-0". In such cases, the post footing must meet the requirements on Sheet 6. Headers with a span length greater than 6'-0" require a plan submission.

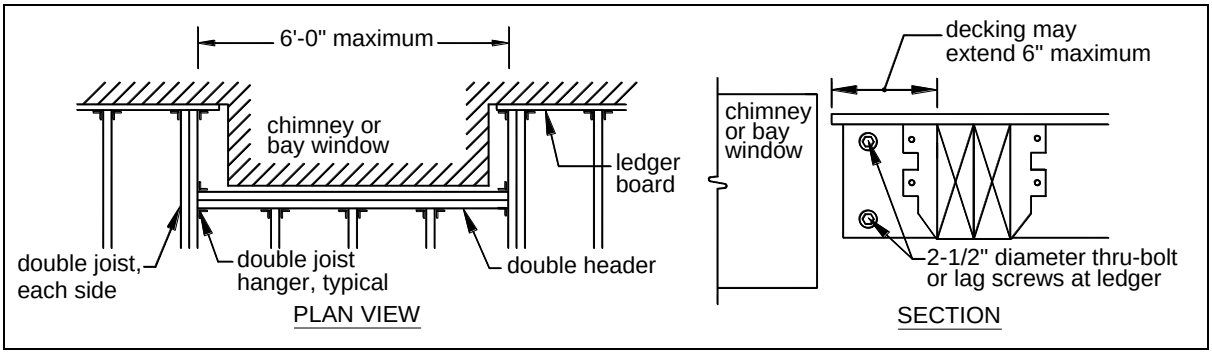

FIGURE 32: REQUIREMENTS FOR FRAMING AT CHIMNEY OR BAY WINDOW

Town of Colonial Beach

VIRGINIA

Typical Deck Details

Based on the 2012 Virginia Construction Code

SAFETY GLAZING REQUIREMENTS: Safety glazing in window glass is required when the existing house wall acts as a barrier to adjacent stairs, landings and the areas at the top and bottom of the stairs. If a window or portion thereof falls within the area shown in **FIGURE 33**, the glass panes within that area shall be safety glazed. Safety glazing is required to reduce injury due to an accidental impact when ascending or descending the stairs.

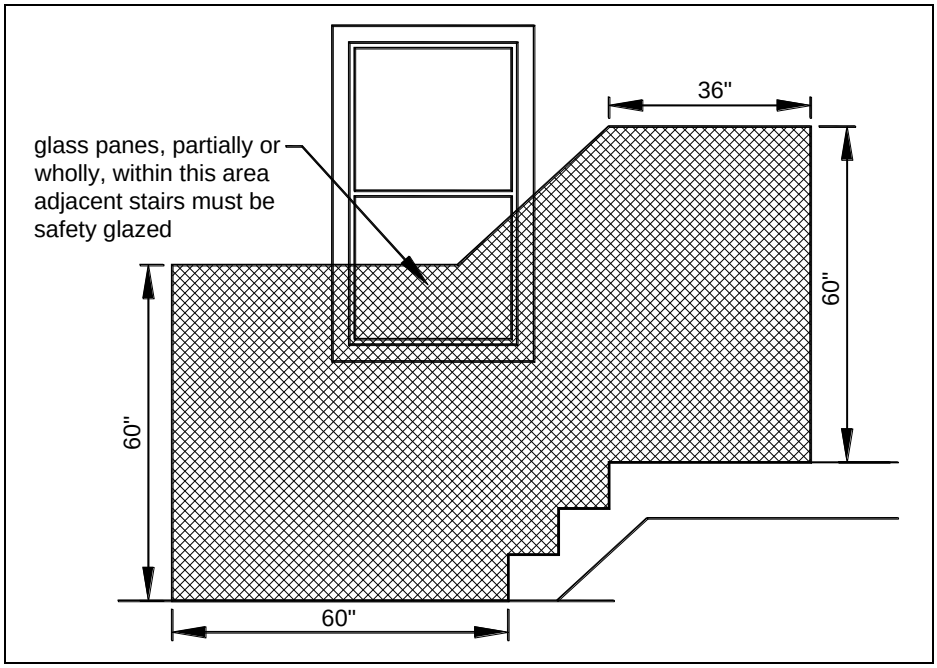

FIGURE 33: SAFETY GLAZING AREA

PRODUCT SPECIFICATIONS

FastenMaster
www.fastenmaster.com
1-800-518-3569
Product referenced:
LedgerLok

Hilti
www.hilti.com
1-800-879-8000
Product referenced:
Epoxy anchor HY-20

Morse Technologies
www.mtdecklok.com
1-866-617-3325
Product referenced:
DeckLok (hot-dipped galvanized)

Ramset-Redhead
www.ramset-redhead.com
1-800-348-3231
Product referenced:
Epoxy anchor Epcon Acrylic 7

Simpson Strong-Tie
www.strongtie.com
1-800-999-5099
Products referenced (in Zmax coating):
Hurricane clips
Joist hangers
Hold-down anchors HD2A
Stud tie plates SP1

USP Structural Connectors
www.uspconnectors.com
1-800-328-5934
Products referenced (in Triple Zinc coating):
Hurricane clips
Joist hangers
Hold-down anchors HD2A
Stud tie plates SPT22